Datasheet - SP05 IN BH255ROROMO

The SP05 sprayer is an all-plastic sprayer with a spraying capacity of 1.25 ML.
The SP05 sprayer is easy to use, with its ergonomic shape and its easy-grip trigger and nozzle.
The nozzle has two positions with spray pictogram and « stop ». The spray pattern is even and circular without large droplets.

General Information

- **Ordering numbers : SP05 IN BH255ROROMO**
- Spraying capacity : 1.25 ml
- Weight : 22.00 gr
- Color :
- Tube length : 255 mm

Photo



Neck : 28/410

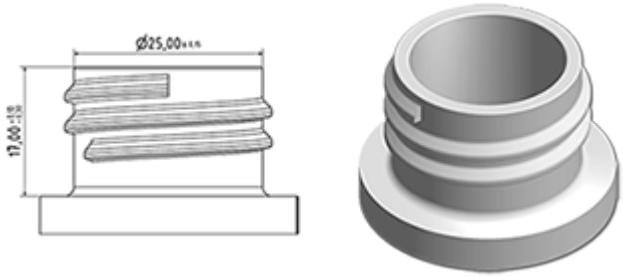

Standard packaging :

- 370 pcs per box
- Dimensions : 60 x 40 x 36 cm
- Gross weight : 9.14 Kg

Exploded View

Pos	description	Material
1	Cover	PP
2	Body	PP
3	Ring	PP
4	Seal	PP/EPE
5	Tube	PP
6	Valve	PP
7	Valve	PP
8	Nozzle	PE
9	Trigger	PP
10	Spring	POM
11	Door foamer	PP

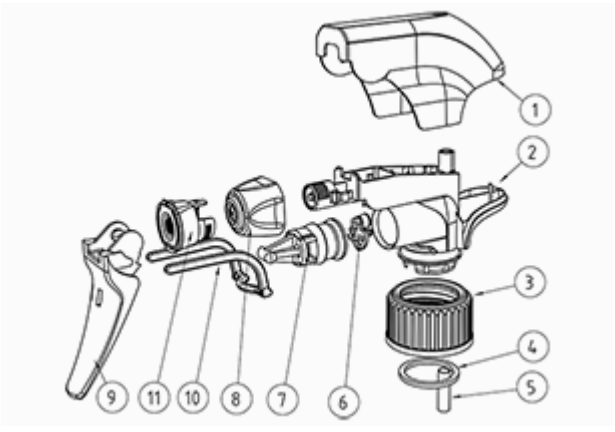

Media





